Process Controller
OC 7056A

Owner's Manual

ORBIT CONTROLS AG
Zürcherstrasse 137
CH-8952 Schlieren/ZH
Tel: + 41 44 730 2753
Fax: + 41 44 730 2783

info@orbitcontrols.ch
www.orbitcontrols.ch

Vor dem Einschalten

Überzeugen Sie sich, ob Ihre Sendung das richtige Gerät Orbit Controls Modell OC 7056A beinhaltet, einschliesslich einer Betriebsanleitung OC 7056A.
Vor dem Einschalten des Gerätes überprüfen Sie die Anschlüsse und die Versorgungsspannung. Ein falsch angeschlossenes Gerät kann beschädigt werden und damit auch die mitverbundene Folgeelektronik. Für falsche Handhabung wird jede Haftung abgelehnt.

ZU BEACHTEN

Dieses Gerät wurde sorgfältig verpackt. Falls es bei Ihnen in beschädigtem Zustand eintrifft, benachrichtigen Sie unverzüglich den Orbit Controls Kundendienst (Tel: +41 1 730 2753 oder Fax: +41 1 730 2783) und nehmen Sie einen Schadenrapport auf, welchen Sie auch von der Transportgesellschaft unterschreiben lassen. Bewahren Sie bitte das Verpackungsmaterial für eventuelle Reklamationen auf.

Unpacking Instructions

Remove the Packing List and verify that you have received all equipment, including the following:
Orbit Controls Model OC 7056A Programmable Controller.
Operator's Manual OC 7056A.
If you have any questions about the shipment, please call the Orbit Controls Customer Service Department.

NOTE

When you receive the shipment, inspect the container and equipment for signs of damage. Note any evidence of rough handling in transit. Immediately report any damage to the Orbit Controls customer service, Phone +411 730 2753 or Fax +411 730 2783 and to the shipping agent.
The carrier will not honor damage claims unless all shipping material is saved for inspection. After examining and removing contents, save packing material and carton in event the reshipment is necessary.

INDEX

		Page
PROGRAMMABLE CONTROLLER OC7056A		5
1	KEYBOARD	5
2	SPECIFICATIONS	6
3	TERMINALS	7
4	MENU	7
5	CONNECTION EXAMPLES	9
	5.1 Process Signal 0/4-20mA	9
	5.2 Two Terminal Sensor	9
	5.3 RTD Thermometer	9
	5.4 Thermocouples and Thermistors	9
	5.5 Strain Gauge with Current Supply	9
	5.6 Strain Gauge with Voltage Supply	9
	5.7 Range Selection	10
	5.8 Supply Voltage Selection 115/230VAC	11
6	SERVICE MENU - HtESt	12
7	CALIBRATION	13
	7.1 Calibration of linear Signals DC and AC	13
	7.2 calibration of non-linear Signals (Tables)	13
	7.2.1 Calibration of Pt-100 Thermometers	13
	7.2.2 Calibration of Thermocouples	13
	7.3 Calculation of R19	13
8	BURST TEST and RECOMMENDED CONNECTION	14

PROGRAMMABLE CONTROLLER OC 7056A

- ✓ **6 digit display ± 999999**
- ✓ **± 100 000 true increments**
- ✓ **DC voltage and current ranges**
- ✓ **AC true RMS ranges**
- ✓ **Four Set Point Relays**
- ✓ **Excitation**
- ✓ **AC or DC supply**
- ✓ **free programmable**
- ✓ **two point calibration**
- ✓ **RS 232 and RS 485**
- ✓ **Analog Outputs 0/4-20mA, 0-10V**

Orbit Controls OC7056A is a programmable 6 digit instrument for DC and AC voltages and currents, linear potentiometers, temperature sensors and signals from various analog sensors and sources. The measured and displayed results are converted into two analog outputs and two serial data strings for further usage.
With the keyboard the menu can be opened and the process parameters set for the required application. The menu contains the function of the display, the selection of the analog outputs, parameters of the serial data ports, setting of the set points, and assignment of the input signal to the display. A Tara function is available for setting the display to zero at any measuring point.
For supplying of external sensors an adjustable Excitation is available.
Service Menu *HtESt* is suitable for checking of the instrument's performance and the calibration.

1 KEYBOARD

MENU
ACK
UP
DOWN
SET
1,2,3,4 **Set Points**
P **Program Mode**

Key	**Function in Measuring Mode**
UP	Maximum stored value appears at the display.
DOWN	Minimum stored value appears at the display.
ACK	Memory reset.

OPTION:
Peak Memory - Display Functions
Dir The Display shows momentary signal value. Selection with **ACK**.
UPP The Display shows continuously the maximum measured value. Selection with **UP**.
LOW The Display shows continuously the minimum measured value. Selection with **DOWN**.

Reset of Peak Memory
To reset the Peak Memory press **UP** or **DOWN** and immediately press the key **SET** for approx. 3 sec until the display shows ***SET***. The Peak Memory is empty and the display shows the value of the signal at the input.

2 SPECIFICATIONS

Display: 0 ... ± 999999, 7 segment red 14.7 mm display units with decimal point.

Input: The input is set at the factory for DC or AC voltage or current, RTD or thermocouples, Potentiometers or Resistor Measurement.

Voltage	± 100mV to 300V DC or true RMS.
	Option: 20mVDC for strain gauges
Current	0/4-20mA, ±20mA to 5A DC or true RMS.
Pt-100/200	2 or 4 wire. -200...+650°C according to PT385.
OHM	10Ω-100k Ω, 2 or 4 wire connection
T/C	E, J, K, S, B, C, T, according to DIN.
	Cold Junction automatic compensation 0 - 60°C.
Thermistors	9796Ω @ 0ºC and 27936Ω @ 0ºC

ADC: 19 bit, bipolar, sampling time 63ms.

Integral Nonlinearity:	± 0.006% of range
Zero Error:	± 0.0168% of range
Rollover Error:	± 0.032% of range
Tempco:	±10ppm°C
Linearity:	± (1 LSB + 1 digit).

Accuracy

DC Ranges	± (0.01% from value + 2 digit)	
True RMS	50Hz - 5 kHz:	± (0.1%from value + 2 digits).
Pt-100 and T/C	*Pt-100/200:*	±(1°C+1 digit)
	T/C, Thermis:	±(2°C+1 digit)
	Tempco:	±25 ppm/ °C.

Set Points: Standard: Set Point Relay SP1, SP2, 5A-230VAC.
Option: Additional Relays SP3, SP4, 5A-230VAC.
Setting range: ± 999999.
Each Set Point has adjustable Hysterese from 0 to 99.

Analog Output: Option: Analog Outputs 0/4-20mA and 0...±10V, 12 bit resolution (Option 16 bit).
Isolation 250V RMS.

Data Output: Option: RS232 or RS485 with addresses 01-31, 8 bit, 1 Start, 1 Stop, No Parity.
Baud Rate 600 … 19200 bd. Isolation 250V RMS.
RS232: The data are transmitted continuously or per request.
Continuous Transmission: Terminal P (RSI) tied to +5V against N (GND).
Request Transmission: Terminals P (RSI), R (RSO) and N (GND) connected to PC D-SUB terminals 3, 2 and 5, - see page 6.
The data are transmitted after <CR> <LF> (ENTER).

Excitation: Voltage: Isolated and adjustable 5 ... 24 V/40mA
Current: Constant source of 1mA for RTD and Resistance Measurements

Supply: 115V / 230V ±10%, 48-60 Hz. Option 9-36VDC-4W.

Cabinet: DIN 48x96x100 mm (H x W x D), Panel cut-out 45 x 90 mm. IP65 front protection.

Terminals: Pluggable Terminal Blocks

3 TERMINALS

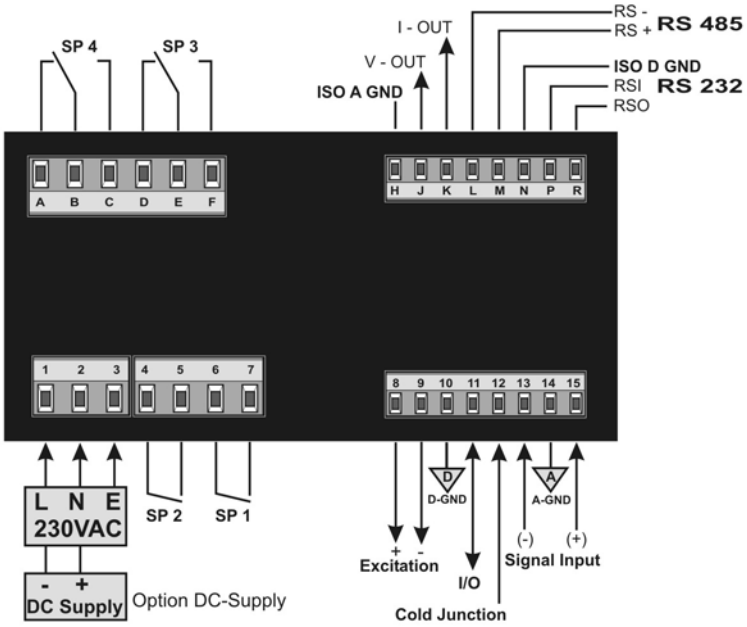

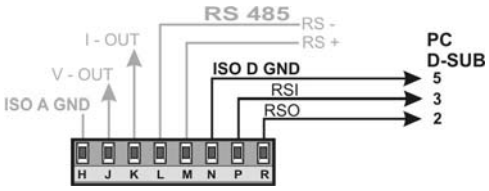

RS232 Request Transmission

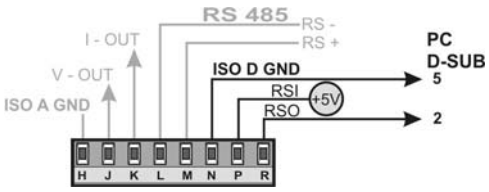

RS232 Continuous Transmission

4 MENU

The key **MENU** opens the Menu. The required parameter will be confirmed with **ACK**. .
With **UP** or **DOWN** the parameters will be set.
The flashing digit - Cursor - can be positioned with **ACK**. The sign and the decimal point can be set after the cursor is positioned outside the display range (none of the digit is flashing).
The key **UP** sets the decimal point, the key **DOWN** sets the sign. The key **SET** terminates the programming and the display returns to the measuring mode.

KEY	DISPLAY	FUNCTION
MENU	PASS	Password selection from 20 stored combinations
ACK	P 0200	Select with UP or DOWN
MENU	OrdEr	Decimal Point, Display Resolution
ACK	CCCC.dd	Select with UP or DOWN
MENU	Fn tArA	Tara function OFF, ONLY or ON.
ACK	ONLY	After pressing the key SET the display will be forced to zero
	ON	The key SET pressed once forces the display to zero. When pressed for second time, the display returns to the non-tare original signal value.
MENU	FiltEr	Setting of filter constant (averaging filter type)
ACK	OFF	Selection: OFF and 1, 2….99
MENU	Count	Counting of the last digit:
ACK	0	Dummy Zero
	1	The display increments 1, 2, 3….9, 0
	2	The display increments 2, 4, 6…
	5	The display increments 0,5,0,5…
MENU	dSP	Display refresh after selected number of measurements
ACK	1	Selection: 1, 2….50
MENU	SP 1	Set Point SP1
ACK	XXXXXX	Selection: -999999 to 999999. The relay is activated when the display arrives at the SP1 or higher values
MENU	HSt 1	SP1 Hysterese

ACK	XXXXXX	Selection: -999999 to 999999	
MENU	FnrL1	Function of the relay SP1	
ACK	OPEN	Selection between OPEN or CLOSE at the alarm conditions	
MENU	SP 2	Set Point SP2	
ACK	XXXXXX	Selection: -999999 to 999999. The relay is activated when the display arrives at the SP1 or higher values	
MENU	HSt 2	SP2 Hysterese	
ACK	XXXXXX	Selection: -999999 to 999999	
MENU	FnrL2	Function of the relay SP2	
ACK	OPEN	Selection between OPEN or CLOSE at the alarm conditions	
		Options SP3 and SP4 are configured as SP1 and SP1.	
MENU	Aout L	Display value for Analog Output 0 (-10) V and 0/4mA	
MENU	Aout H	Display value for Analog Output 10V and 20mA The Output 0-10V or -10…10V are jumper selectable	
MENU	SEt SEn	Selection of the type of linearization	
		LinEAr	linear type of characteristic for DC- and AC inputs.
		POLYn	Polynom Linearizing
		tAbtAb	X-Y Table assignement of input signal to display reading
		Pt 100	RTD thermometer
		tEr3t	Thermistor 9796 Ohm @ 0 ºC
		tEr5t9	Thermistor 27936 Ohm @ 0 ºC
		tC E	Thermocouple E with external could junction
		tCC E	Thermocouple E with internal could junction
		tC J	Thermocouple J with external could junction
		tCC J	Thermocouple J with internal could junction
		tC L	Thermocouple K with external could junction
		tCC L	Thermocouple K with internal could junction
		tC S	Thermocouple S with external could junction
		tCC S	Thermocouple S with internal could junction
		tC b	Thermocouple B with external could junction
		tCC b	Thermocouple B with internal could junction
		tC t	Thermocouple T with external could junction
		tCC t	Thermocouple T with internal could junction
		tC C	Thermocouple C with external could junction
		tCC C	Thermocouple C with internal could junction
		Cold	Cold junction temperature measured and displayed
MENU	Set in	0.0 1	Setting for bipolar inputs, e.g. ±1V and 0-20mA
		0.2 1	Setting for shifted inputs, e.g. 4-20mA.
		-1 1	Setting for bipolar input signals, e.g. –20 ... +20V.
MENU	Set LO	Required display value for the minimum input signal (e.g. 4mA)	
MENU	Set HI	Required display value for the maximum input signal (e.g. 20mA)	
MENU	bAUd	Baud rate of the data port	
ACK	1200	Selection: 1200 to 19200 bd	
MENU	Contin	Transmission Mode	
ACK	OFF	On = continuous transmission, OFF=request transmission	
MENU	rS Adr	Address of the RS485 data port	
ACK	rS 232	RS232 is activated with address 00	
	31	RS485 is activated with one of addresses 01 … 31	
MENU	StPASS	Password selection from 20 stored combinations	
MENU	Start	Measuring mod	

5 CONNECTIONS EXAMPLE

5.1 Process Signal 0/4-20mA

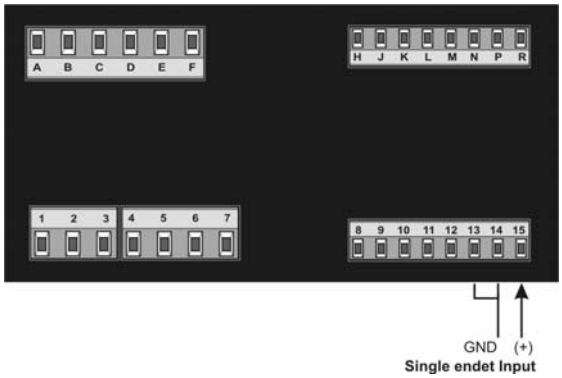

5.2 Two Terminal Sensor

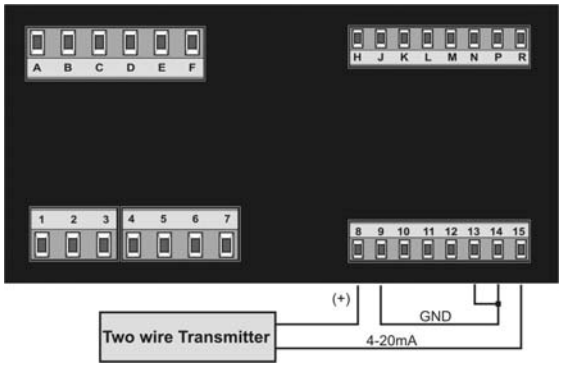

5.3 RTD Thermometer and Ohmmeter

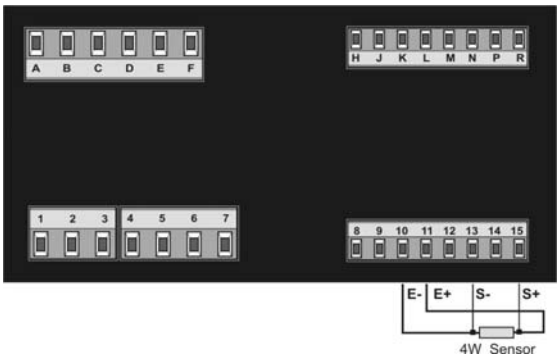

5.4 Thermocouples and Thermistors

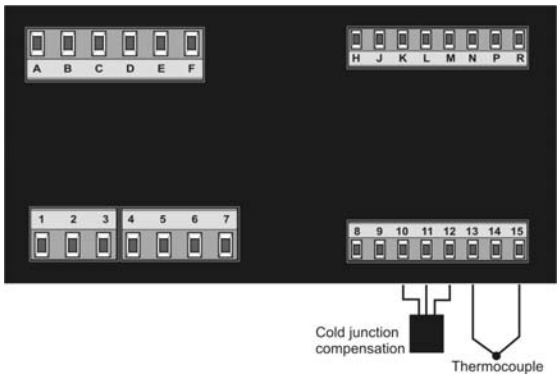

5.5 Differential input

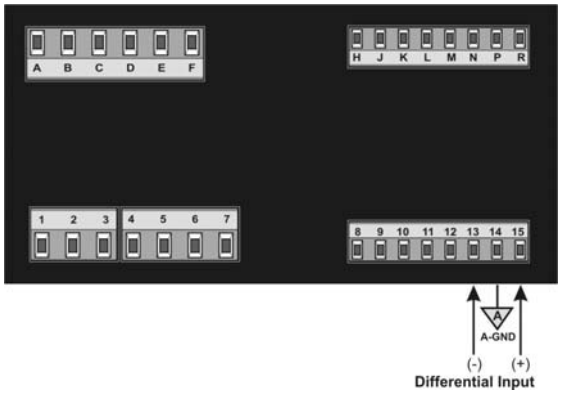

5.6 Strain Gauge with voltage supply

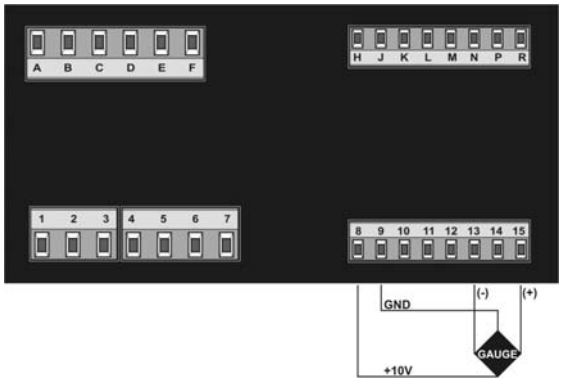

5.7 Range Selection

Jumper	20mA	1V	10V	100V	10mV-1V
H1	1+2	1+2	2+3	2+3	1+2
Z8 , Z9	DC= Z8 close, Z9 open		AC= Z8 open, Z9 close		
H3	1+2	---	---	2+3	---
R19 (page 11, § 7.3)	open	open	open	open	R=50k/G-1
Input single ended	(+)15, (-)14,13	(+)15, (-)14,13	(+)15, (-)14,13	(+)15, (-)14,13	(+)15, (-)14,13
Input differential	---	(+)15, (-)13	---	---	(+)15, (-)13

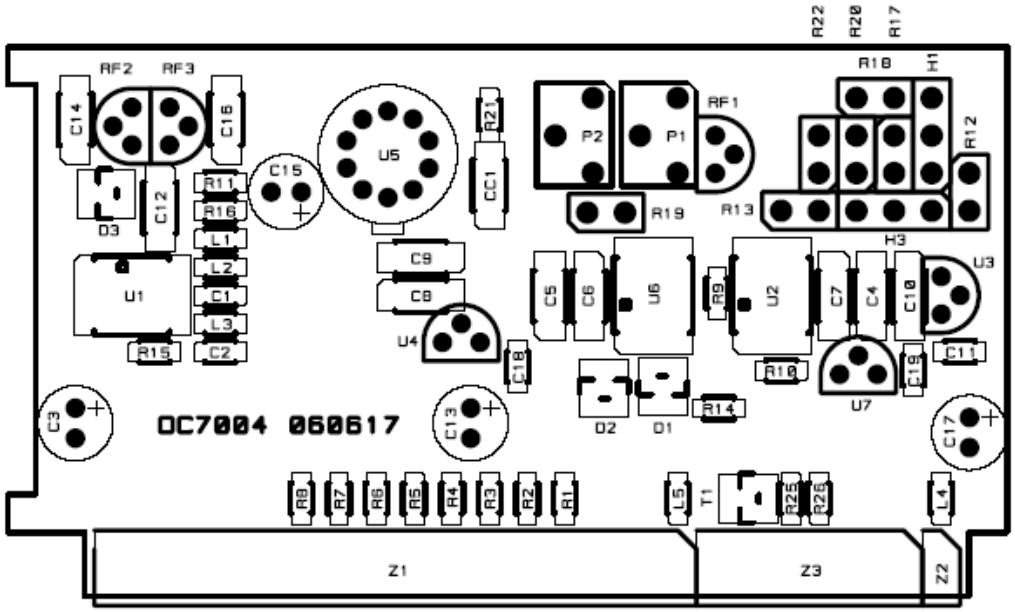

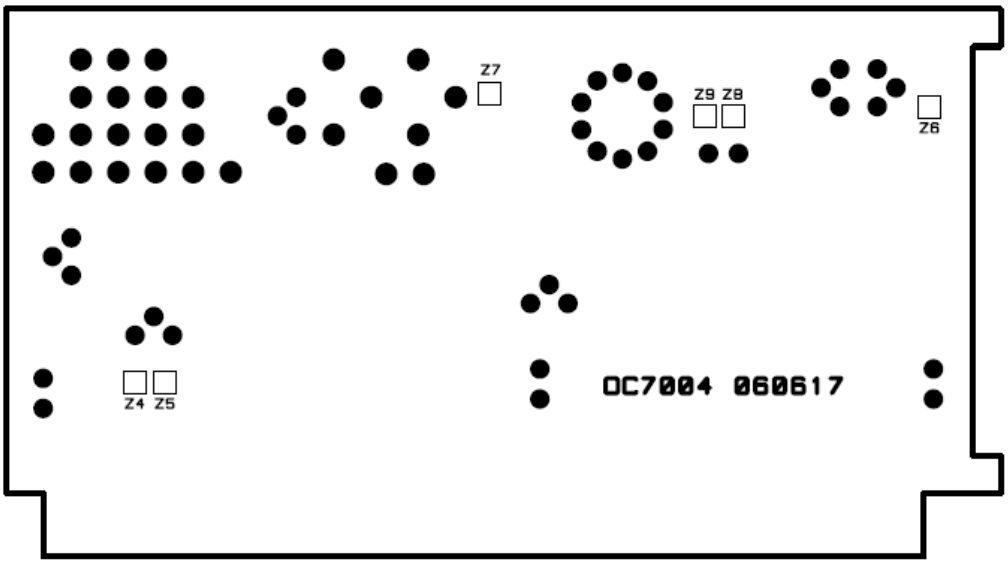

5.8 Supply Voltage Selection115/230VAC. Solder Side of the Printed Board.

115VAC: X2 = X3 = closed
X1 = open

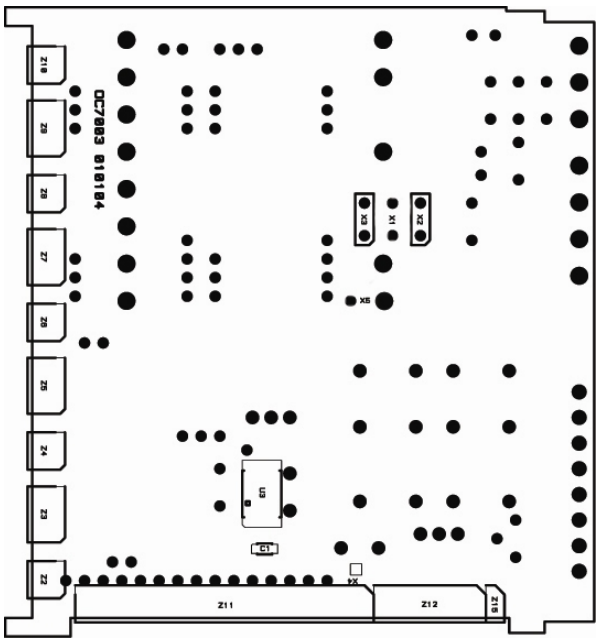

230VAC: X1 = closed
X2 = X3 = open

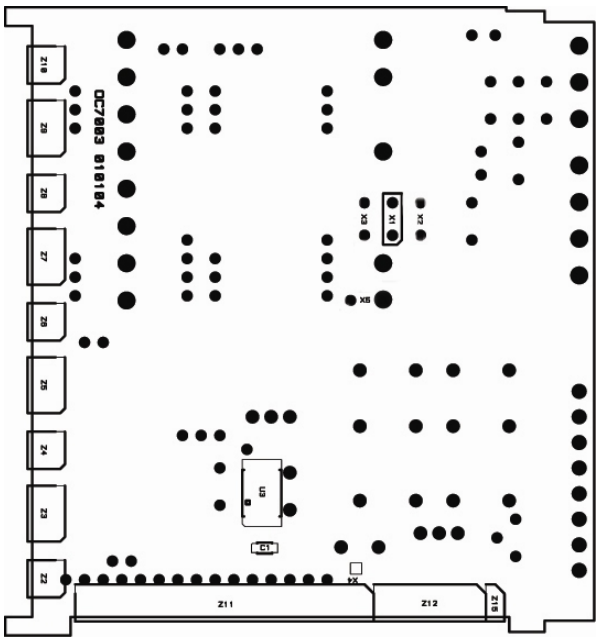

6 SERVICE MENU - HtESt

The Service Menu ***HtESt*** permits fast check of the instrument's performance and offers the software calibration via the keyboard. To enter the Service menu, keep the key **MENU** pressed while the instrument is switched-on. Release the key when the display shows ***HtESt***. The service menu steps are incremented forward with the key **MENU**, decremented backward with **SET**.

In the service menu the digit segments are tested first. After the HCF value can be entered (see bellow). Than the signal channel can be calibrated. The set point relays and the display LEDs are activated. At the end the analog outputs are generated.

Segments all segments are activated

HCF.128 HCF parameter defines the range of the menu. The menu without options Analog Output, Set Points and RS data ports is determined with HCF = 128. Each option is activated in the menu with binary value added to the HCF 128:

1 SP1
2 SP2
4 SP3
8 SP4
16 Analog output
32 Baud rate
64 Address of the data port

Combinations define the menu range:
HCF.144 Menu (128) and Analog Output (16).
HCF.240 Menu (128), Analog Output (16), Baud rate (32) and Address (64).

AdC ADC internal DC value of the converter.
ATTENTION! The input signal has to be set to ZERO before this Step is entered!

1.25XXX Apply the zero signal value. The display shows the internal voltage reference 1.25V. The Zero Value will be calibrated when the key **DOWN** is pressed. The display shows ***Ac LO***. Press the key **ACK** and keep it pressed until the display shows ***EE StO***.
The Zero Signal Value has been calibrated.

2.2XXXX The Maximum Signal Value will be calibrated when the full range signal is applied and the key **UP** is pressed. The display shows ***AC HI***. Press the key **ACK** and keep it pressed until the display shows ***EE StO***.
The maximum signal value has been calibrated.

rES The Display shortly shows ***rES*** and switches into the measuring mode. The display corresponds to the **SEt HI** programmed value in the main menu.

COL. X Correction of the cold junction temperature.

SP1 Set Point 1 and the Relays 1 are activated.
SP2 Set Point 2 and the Relays 2 are activated.
SP3 Set Point 3 and the Relays 3 are activated.
SP4 Set Point 4 and the Relays 4 are activated.
An - 10 Analog Output -10V and 0/4 mA are generated (0 or 4mA selectable).
An - 5 Analog Output -5V and 5/8 mA are generated.
An 0 Analog Output 0V and 10/12 mA are generated.
An 5 Analog Output 5V and 15/16 mA are generated.
An 10 Analog Output 10V and 20 mA are generated.
StArt Measuring Mode

7 CALIBRATION

7.1 Calibration of linear signals DC and AC

The calibration steps are described in §6, Service Menu and *HtESt.* Linear signals such as 4-20mA, 0-1V can be calibrated as described.

7.2 Calibration of non-linear signals (Tables)

Input signals such as RTD Thermometer and Thermocouples will be linearized as follows:

7.2.1 Calibration of Pt-100 Thermometer

Jumper	Pt-100
H1	1 + 2
Z8	closed
Z9	open
H3	---
R19	18k Resistor 1%

SEnS LinEAr
Set LO 0
Set HI 100

In the HtESt calibrate with 0 Ohm and 100 Ohm. After the calibration is finished, switch OFF and ON again.
SEnS select Pt 100 in the Menu.

Switch into the measuring mode with ACK. The Display follows the temperature of Pt-100 in a range from -200 to 600ºC.

7.2.2 Calibration of Thermocouples

Jumper	Thermocouples
H1	1 + 2
Z8	closed
Z9	open
H3	---
R19	5k6 Resistor 1%

SEnS LinEAr
Set LO 0
Set HI 100 (100 = 100 mV)

In the HtESt calibrate with 0 und 100mV. After the calibration is finished, switch OFF and ON again.

SEnS Select the required T/C in the Menu. Switch into the measuring mode with ACK. The Display follows the temperature of the selected T/C within its defined range.

The cold junction is compensated with SMT160 connected to the terminal block.

7.3 Calculation of R19

When the individual measuring range by using R19 is selected, following has to be considered:
The AD-C type LT2400 is designed for bipolar operation. Its zero reference point is set to +1.25V. Since R19 determines the gain of the input amplifier INA118, its output signal (Pin 6) has to be within 0 and 2.500V for the full range of the input signal. For Zero input is Pin 6 = 1.25V. For maximum negative input is Pin 6 = 2.500V. For maximum positive input is Pin 6 = 0V. It is important to calculate R19 such that the signal swing at the output of INA118 (Pin 6) never goes bellow 0V and above 2.500V.

The calibration mode in the ***HtESt*** shows the range of the input signal (§ 6). When zero signal is applied, the display shows the reference voltage of 1.25xx V. With a maximum signal the display will show 2.500V. It is recommended to set R19 such that the display arrives at 2.2xxx with the maximum value of the input signal. This will permit 10% overload of the input.

$$R19 = \frac{50kOhm}{G - 1}$$

G = Gain

8 BURST TEST and RECOMENDED GROUNDING

Tester: Burst-Surge Generator HILO, Model CE-Tester
E.U.T.: Main Board OC7040, SN: 980315, Supply 230VA
Mode: Linear, Set LO = 000000, Set HI = 10000
Input: 4-20mA
Display: 10 000

8.1 Test Conditions

According to: IEC 801-4
IEC 1000-4-4
EN 50052-1

8.2 Test Set - Up

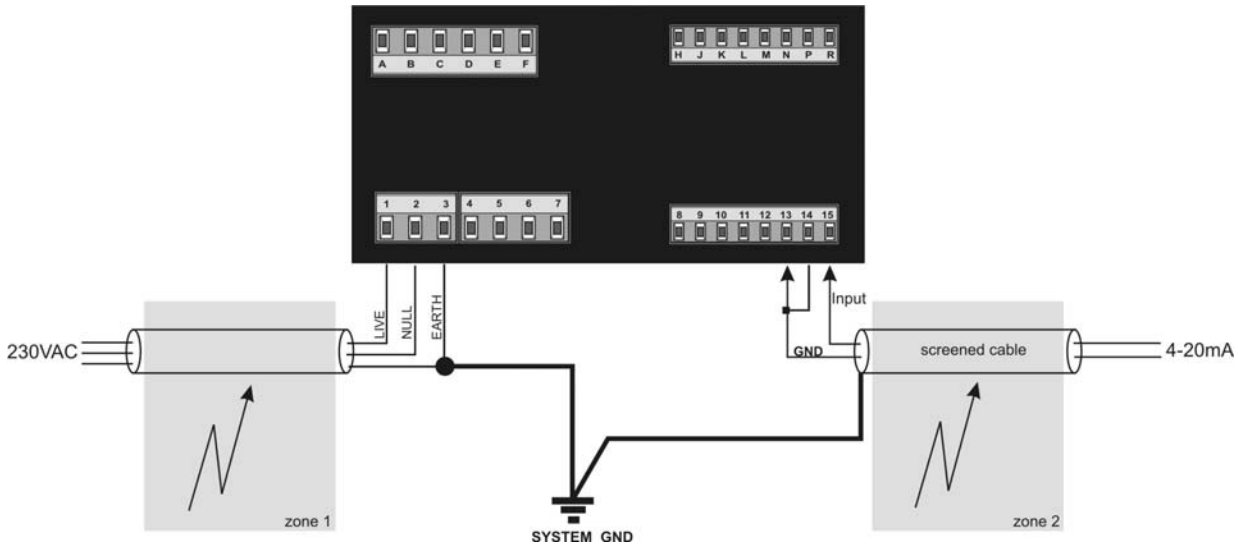

8.3 Test Results

Zone 1:	2kV Burst	Display 10 000 without change
Zone 2:	2kV Burst	Display 10 000 without change

CE Approval No: 321/30-3/539, c.j. 9004/69 from 15.6.1998 VTUE Praque